Cambridge International AS & A Level

Cambridge Assessment International Education
Cambridge International Advanced Subsidiary and Advanced Level

CANDIDATE NAME

CENTRE NUMBER

CANDIDATE NUMBER

0605716709

PHYSICS **9702/32**

Paper 3 Advanced Practical Skills 2 **May/June 2019**

2 hours

Candidates answer on the Question Paper.

Additional Materials: As listed in the Confidential Instructions.

READ THESE INSTRUCTIONS FIRST

Write your centre number, candidate number and name on all the work you hand in.
Write in dark blue or black pen.
You may use an HB pencil for any diagrams or graphs.
Do not use staples, paper clips, glue or correction fluid.
DO **NOT** WRITE IN ANY BARCODES.

Answer **both** questions.
You will be allowed to work with the apparatus for a maximum of one hour for each question.
You are expected to record all your observations as soon as these observations are made, and to plan the presentation of the records so that it is not necessary to make a fair copy of them.
You are reminded of the need for good English and clear presentation in your answers.

Electronic calculators may be used.
You may lose marks if you do not show your working or if you do not use appropriate units.

Additional answer paper and graph paper should be used only if it becomes necessary to do so.

At the end of the examination, fasten all your work securely together.
The number of marks is given in brackets [ ] at the end of each question or part question.

For Examiner's Use	
1	
2	
Total	

This document consists of **10** printed pages and **2** blank pages.

© UCLES 2019

Cambridge Assessment International Education

[Turn over

BLANK PAGE

© UCLES 2019

You may not need to use all of the materials provided.

1 In this experiment, you will investigate an electrical circuit.

(a) • Assemble the circuit as shown in Fig. 1.1.

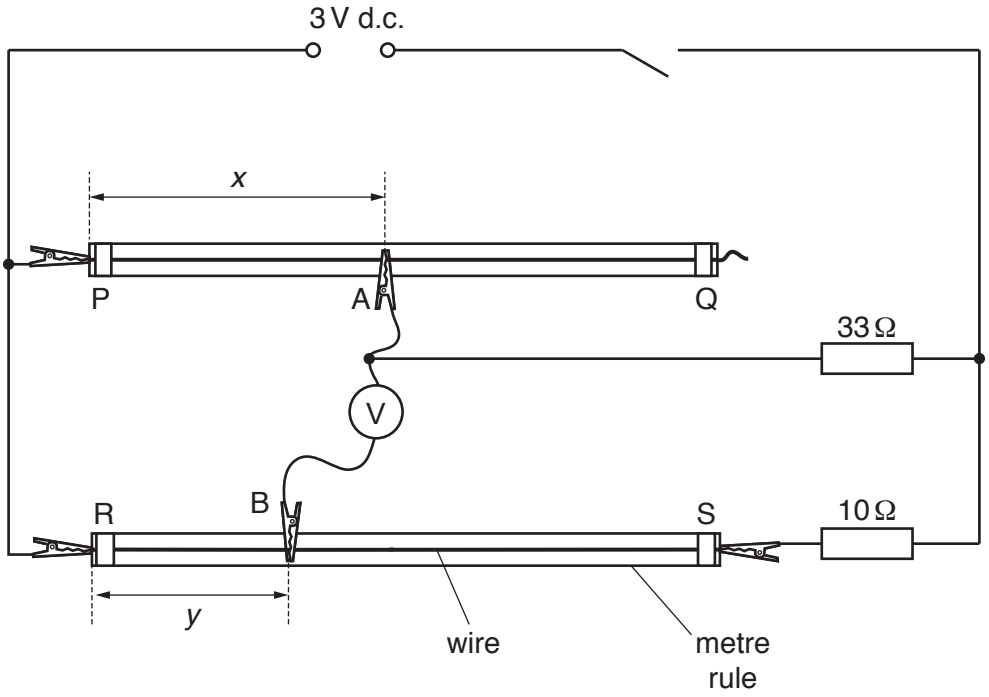

Fig. 1.1

- A and B are crocodile clips. PQ and RS are wires.

  Connect A near the midpoint of PQ.

- Measure and record the length *x* of wire between P and A.

x = ... cm [1]

(b) • Connect B to RS.

- Close the switch.
- Adjust the position of B until the voltmeter reading is as close as possible to zero.
- Measure and record the length *y* of wire between R and B.

y = ... cm

- Open the switch.

[1]

© UCLES 2019

(c) Change x and repeat **(b)** until you have six sets of values of x and y.
Record your results in a table.

Include values of $\frac{1}{x}$ and $\frac{1}{y}$ in your table.

[10]

(d) **(i)** Plot a graph of $\frac{1}{y}$ on the y-axis against $\frac{1}{x}$ on the x-axis. [3]

(ii) Draw the straight line of best fit. [1]

(iii) Determine the gradient and y-intercept of this line.

gradient = ...

y-intercept = ...
[2]

© UCLES 2019

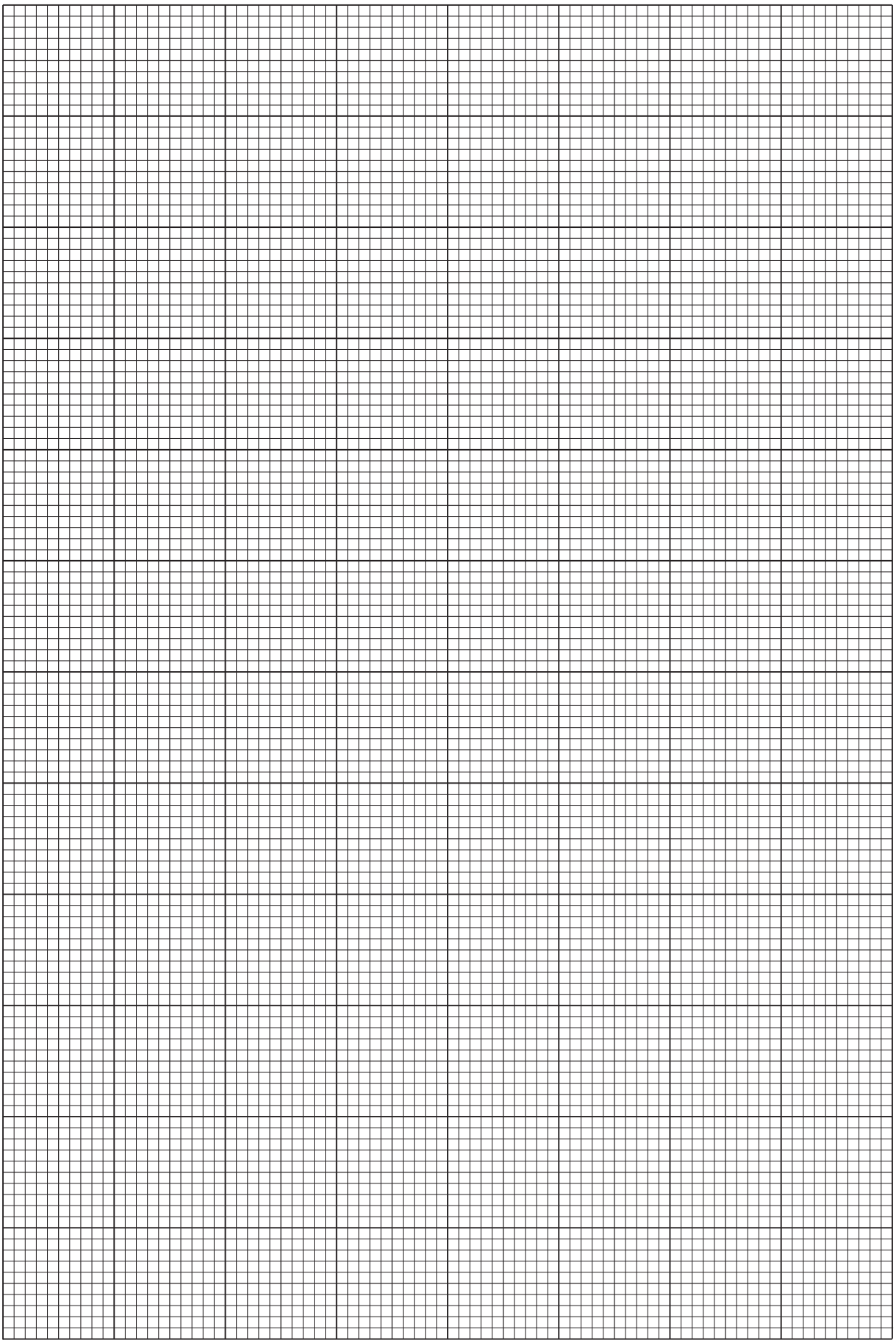

© UCLES 2019

[Turn over

(e) It is suggested that the quantities y and x are related by the equation

$$\frac{1}{y} = \frac{a}{x} + b$$

where a and b are constants.

Use your answers in **(d)(iii)** to determine the values of a and b.
Give appropriate units.

a = ...

b = ...
[2]

[Total: 20]

© UCLES 2019

You may not need to use all of the materials provided.

2 In this experiment, you will investigate the friction between an inclined board and a wooden block.

(a) • Set up the apparatus as shown in Fig. 2.1.

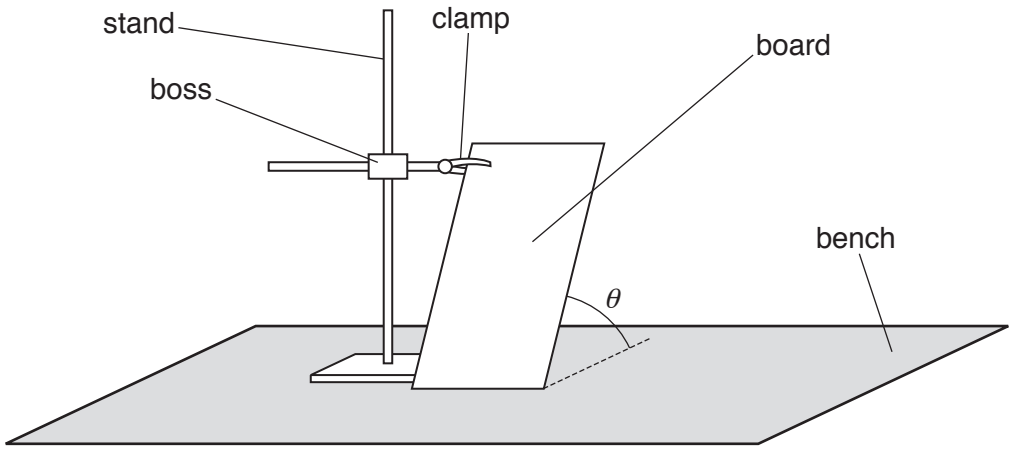

Fig. 2.1

- Adjust the apparatus until the angle θ between the board and the bench has a value between 32° and 38°.

- Measure and record θ.

θ = ...° [1]

© UCLES 2019

(b)
- Attach the newton meter to the wooden block using the string loop.
- Place the block on the board, with the label of the block at the top.
- Pull the newton meter and block up the board at a constant speed. Keep the string loop parallel to the board, as shown in Fig. 2.2.

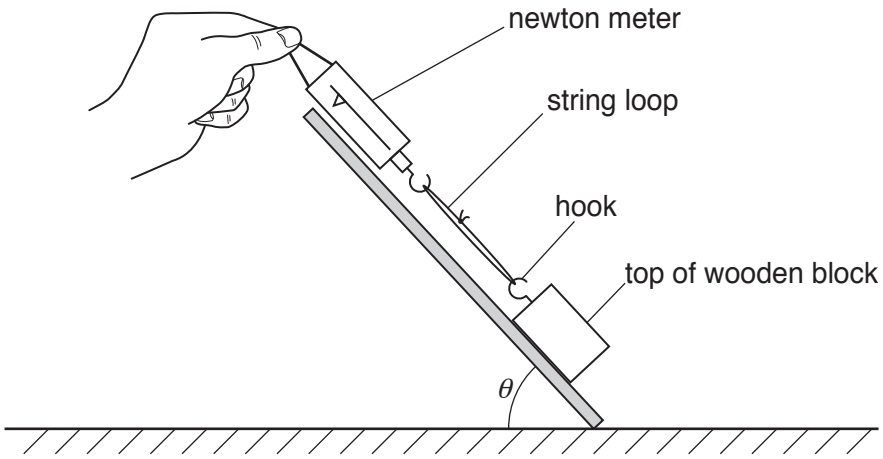

Fig. 2.2

- Record the force *F* when the block is travelling at a constant speed.

F = ... [2]

(c) Estimate the percentage uncertainty in your value of *F*.

percentage uncertainty = ... [1]

© UCLES 2019

(d) (i) • Adjust the board so that θ is between 12° and 18°.

• Measure and record θ.

θ = ...° [1]

(ii) Repeat **(b)**.

F = ... [2]

(e) Using the newton meter, measure and record the weight W of the block and hook.

$W =$ ..... [1]

(f) It is suggested that the relationship between F, W and θ is

$$\frac{F}{W} = \sin\theta + \mu\cos\theta$$

where μ is a constant.

(i) Using your data, calculate two values of μ.

first value of $\mu =$ .....

second value of $\mu =$ .....
[1]

(ii) Explain whether your results support the suggested relationship.

.....

.....

..... [1]

(g) Using your second value of μ, calculate the value of F when $\theta = 65°$.
Give your answer to an appropriate number of significant figures.

$F =$ ..... [2]

© UCLES 2019

(h) (i) Describe four sources of uncertainty or limitations of the procedure for this experiment.

1. .....

.....

2. .....

.....

3. .....

.....

4. .....

.....

[4]

(ii) Describe four improvements that could be made to this experiment. You may suggest the use of other apparatus or different procedures.

1. .....

.....

2. .....

.....

3. .....

.....

4. .....

.....

[4]

[Total: 20]

© UCLES 2019

BLANK PAGE

Permission to reproduce items where third-party owned material protected by copyright is included has been sought and cleared where possible. Every reasonable effort has been made by the publisher (UCLES) to trace copyright holders, but if any items requiring clearance have unwittingly been included, the publisher will be pleased to make amends at the earliest possible opportunity.

To avoid the issue of disclosure of answer-related information to candidates, all copyright acknowledgements are reproduced online in the Cambridge Assessment International Education Copyright Acknowledgements Booklet. This is produced for each series of examinations and is freely available to download at www.cambridgeinternational.org after the live examination series.

Cambridge Assessment International Education is part of the Cambridge Assessment Group. Cambridge Assessment is the brand name of the University of Cambridge Local Examinations Syndicate (UCLES), which itself is a department of the University of Cambridge.

© UCLES 2019